Continental Device India Limited

An ISO/TS 16949, ISO 9001 and ISO 14001 Certified Company

PNP SILICON PLANAR TRANSISTORS

2N6432 2N6433

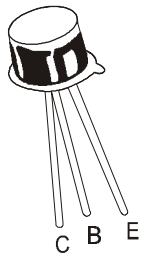

TO-18
Metal Can Package

General Purpose Transistors

ABSOLUTE MAXIMUM RATINGS

DESCRIPTION	SYMBOL	2N6432	2N6433	UNIT
Collector Emitter Voltage	V_{CEO}	200	300	V
Collector Base Voltage	V_{CBO}	200	300	V
Emitter Base Voltage	V_{EBO}	5	5	V
Collector Current Continuous	I_C	500		mA
Power Dissipation at T_a=25ºC	P_D	500		mW
Derate Above 25ºC		2.86		mW/ºC
Power Dissipation at T_c=25ºC	P_D	1.8		W
Derate Above 25ºC		10.3		mW/ºC
Operating and Storage Junction Temperature Range	T_j, T_{stg}	- 65 to +200		ºC

ELECTRICAL CHARACTERISTICS (T_a=25ºC unless specified otherwise)

DESCRIPTION	SYMBOL	TEST CONDITION	2N6432	2N6433	UNIT
Collector Emitter Voltage	*V_{CEO}	I_C=1mA, I_B=0	200	300	V
Collector Base Voltage	V_{CBO}	I_C=100µA, I_E=0	200	300	V
Emitter Base Voltage	V_{EBO}	I_E=100µA, I_C=0	5	5	V
Collector Cut Off Current	I_{CBO}	V_{CB}=160V, I_E=0	0.25		µA
		V_{CB}=200V, I_E=0		0.25	µA
			MIN	**MAX**	
Emitter Cut Off Current	I_{EBO}	V_{EB}=3V, I_C = 0		0.1	µA
DC Current Gain	h_{FE}	I_C=1mA, V_{CE}=10V	25		
		I_C=10mA, V_{CE}=10V	40		
		I_C=30mA, V_{CE}=10V	30	150	
Collector Emitter Saturation Voltage	$V_{CE\ (sat)}$	I_C=20mA, I_B=2mA		0.5	V
Base Emitter Saturation Voltage	$V_{BE\ (sat)}$	I_C=20mA, I_B=2mA		0.9	V

***Pulse Test: Pulse Width ≤ 300ms, Duty Cycle ≤ 2%**

2N6432_2N6433 Rev050309E

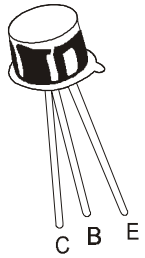

TO-18
Metal Can Package

ELECTRICAL CHARACTERISTICS (T_a=25ºC unless specified otherwise)

SMALL SIGNAL CHARACTERISTICS

DESCRIPTION	SYMBOL	TEST CONDITION	MIN	TYP	MAX	UNIT
Transition Frequency	f_T	I_C=10mA, V_{CE}=20V, f=20MHz	50		500	MHz
Collector Base Capacitance	C_{Cb}	V_{CB}=20V, I_E=0, f=1MHz			6.0	pF

2N6432_2N6433 Rev050309E

TO-18 Metal Can Package

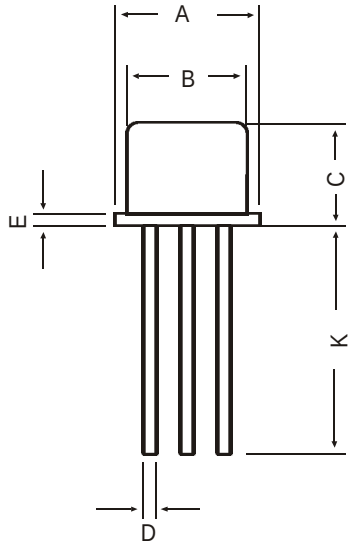

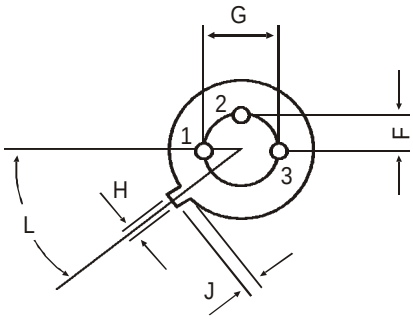

All diminsions in mm.

DIM	MIN	MAX
A	5.24	5.84
B	4.52	4.97
C	4.31	5.33
D	0.40	0.53
E	—	0.76
F	—	1.27
G	—	2.97
H	0.91	1.17
J	0.71	1.21
K	12.70	—
L	45 DEG	

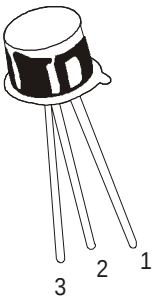

PIN CONFIGURATION

1. EMITTER
2. BASE
3. COLLECTOR

Packing Detail

PACKAGE	STANDARD PACK		INNER CARTON BOX		OUTER CARTON BOX		
	Details	Net Weight/Qty	Size	Qty	Size	Qty	Gr Wt
TO-18	1K/polybag	350 gm/1K pcs	3" x 7.5" x 7.5"	5K	17" x 15" x 13.5"	80K	34 kgs

2N6432_2N6433 Rev050309E

TO-18
Metal Can Package

Component Disposal Instructions

1. CDIL Semiconductor Devices are RoHS compliant, customers are requested to please dispose as per prevailing Environmental Legislation of their Country.

2. In Europe, please dispose as per EU Directive 2002/96/EC on Waste Electrical and Electronic Equipment (WEEE).

Disclaimer

The product information and the selection guides facilitate selection of the CDIL's Semiconductor Device(s) best suited for application in your product(s) as per your requirement. It is recommended that you completely review our Data Sheet(s) so as to confirm that the Device(s) meet functionality parameters for your application. The information furnished in the Data Sheet and on the CDIL Web Site/CD are believed to be accurate and reliable. CDIL however, does not assume responsibility for inaccuracies or incomplete information. Furthermore, CDIL does not assume liability whatsoever, arising out of the application or use of any CDIL product; neither does it convey any license under its patent rights nor rights of others. These products are not designed for use in life saving/support appliances or systems. CDIL customers selling these products (either as individual Semiconductor Devices or incorporated in their end products), in any life saving/support appliances or systems or applications do so at their own risk and CDIL will not be responsible for any damages resulting from such sale(s).

CDIL strives for continuous improvement and reserves the right to change the specifications of its products without prior notice.

CDIL is a registered Trademark of
Continental Device India Limited
C-120 Naraina Industrial Area, New Delhi 110 028, India.
Telephone + 91-11-2579 6150, 4141 1112 Fax + 91-11-2579 5290, 4141 1119
email@cdil.com www.cdilsemi.com

2N6432_2N6433 Rev050309E