12Amp SCRs

CYN612M

TO-220

TO-220
Plastic Package
RoHS compliant

GENERAL DISCRIPTIONS:

With high ability to withstand the shock loading of large current, CYN612M series of silicon controlled rectifiers provide high dv/dt rate with strong resistance to electromagnetic interference. They are especially power charger, T-tools etc.
From all three terminals to external heatsink, CYN162M provides a rated insulation voltage of 2500 VRMS, and CYN612M provides a rated insulation voltage of 2000 VRMS, complying with UL standards (File ref: E252906)

MAIN FEATURE:

1. This product is available in AEC-Q101 Compliant and PPAP Capable also.

Note: For AEC-Q101 compliant products, please use suffix -AQ in the part number while ordering.

SYMBOL	CYN616B	CYN816B
V_{DRM}/ V_{RRM}	600V	800V
$I_{T(RMS)}$	12A	
I_{GT}	≤15mA	

ABSOLUTE MAXIMUM RATINGS (Ta = 25 ℃ Unless otherwise specified)

PARAMETER		SYMBOL	VALUE	UNIT
Storage junction temperature range		T_{stg}	-40 to +150	°C
Operating junction temperature range		T_j	-40 to +125	°C
Repetitive peak off-state voltage(T_j=25°C)		V_{DRM}	600/800	V
Repetitive peak reverse voltage(T_j=25°C)		V_{RRM}	600/800	V
RMS on-state current	T_C=100°C	$I_{T(RMS)}$	12	A
	T_C=125°C			
Non repetitive surge peak on-state current (tp=10ms)		I_{TSM}	140	A
I^2t value for fusing (tp=10ms)		I^2t	98	A^2s
Critical rate of rise of on-state current		dI/dt	50	A/μs
Peak Gate Current		I_{GM}	4	A
Average gate power dissipation		$P_{G(AV)}$	1	W
Peak gate power		P_{GM}	5	W
Junction to case(AC)		$R_{th(j-c)}$	1.3	°C

CYN612M
Rev01_30112022EBJ

ELECTRICAL CHARACTERISTICS at (Ta = 25 ℃ Unless otherwise specified)

PARAMETER	SYMBOL	TEST CONDITIONS	MIN	TYP	MAX	UNIT
DYNAMIC CHARACTERISTICS						
Triggering gate current	I_{GT}	V_D=12V R_L=33Ω	--	--	15	mA
Triggering gate voltage	V_{GT}		--	--	1.5	V
Non-triggering gate voltage	V_{GD}	V_D=V_{DRM} T_j=125°C R_L=3.3KΩ	0.2	--		V
Latching current	I_L	I_G=1.2I_{GT}	--	--	60	mA
Holding current	I_H	I_T=500mA	--	--	50	mA
Critical rate of rise of off-state voltage	dV/dt	V_D=2/3V_{DRM} Gate Open T_j=125°C	200	--	--	V/μs
STATIC CHARACTERISTICS						
Peak on-state voltage drop	V_{TM}	I_{TM}=24A t_p=380μs	--	--	1.55	V
Maximum forward leakage current	I_{DRM}	V_D=V_{DRM} V_R=V_{RRM}	--	--	5	μA
Maximum reverse leakage current	I_{RRM}		--	--	2	mA

Recommended Reflow Solder Profiles

The recommended reflow solder profiles for Pb and Pb-free devices are shown below.

Figure 1 shows the recommended solder profile for devices that have Pb-free terminal plating, and where a Pb-free solder is used.

Figure 2 shows the recommended solder profile for devices with Pb-free terminal plating used with leaded solder, or for devices with leaded terminal plating used with a leaded solder.

Figure 1

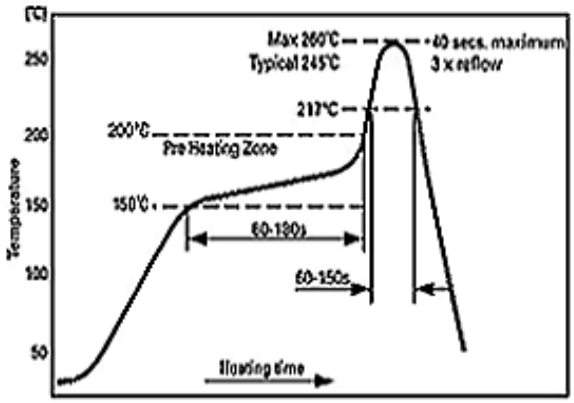

Figure 2

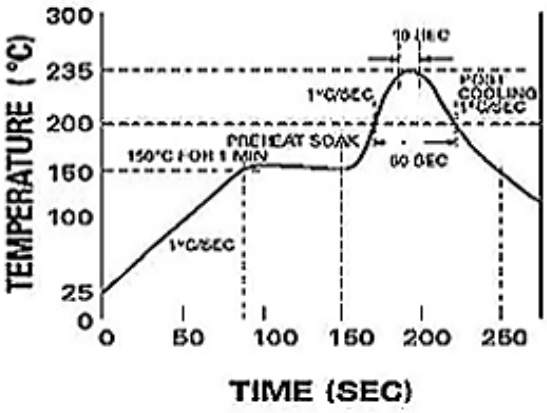

Reflow profiles in tabular form

Profile Feature	Sn-Pb System	Pb-Free System
Average Ramp-Up Rate	~3°C/second	~3°C/second
Preheat – Temperature Range – Time	150-170°C 60-180 seconds	150-200°C 60-180 seconds
Time maintained above: – Temperature – Time	200°C 30-50 seconds	217°C 60-150 seconds
Peak Temperature	235°C	260°C max.
Time within +0 -5°C of actual Peak	10 seconds	40 seconds
Ramp-Down Rate	3°C/second max.	6°C/second max.

Recommended Wave Solder Profiles

The Recommended solder Profile For Devices with Pb-free terminal plating where a Pb-free solder is used

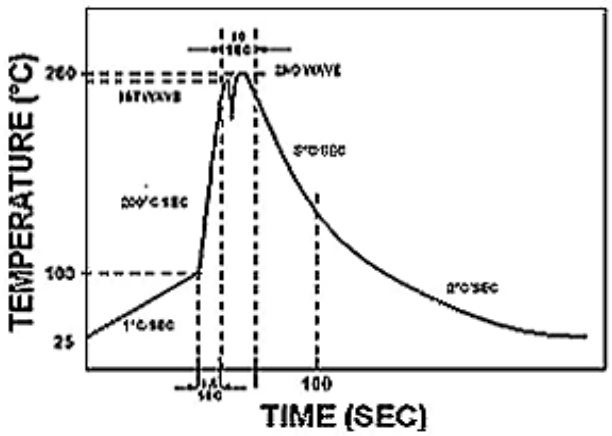

The Recommended solder Profile For Devices with Pb-free terminal plating used with leaded solder, or for devices with leaded terminal plating used with leaded solder

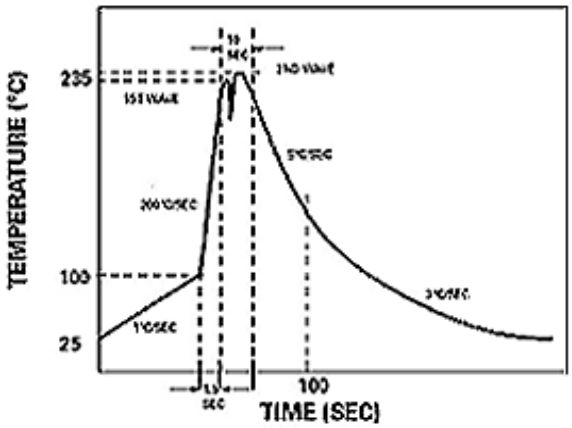

Wave Profiles in Tabular Form

Profile Feature	Sn-Pb System	Pb-Free System
Average Ramp-Up Rate	~200°C/second	~200°C/second
Heating rate during preheat	Typical 1-2, Max 4°C/sec	Typical 1-2, Max 4°C/Sec
Final preheat Temperature	Within 125°C of Solder Temp	Within 125°C of Solder Temp
Peak Temperature	235°C	260°C max.
Time within +0 -5°C of actual Peak	10 seconds	10 seconds
Ramp-Down Rate	5°C/second max.	5°C/second max

TYPICAL CHARACTERISTICS CURVES

Fig 1: Maximum Power Dissipation Versus RMS on-state Current

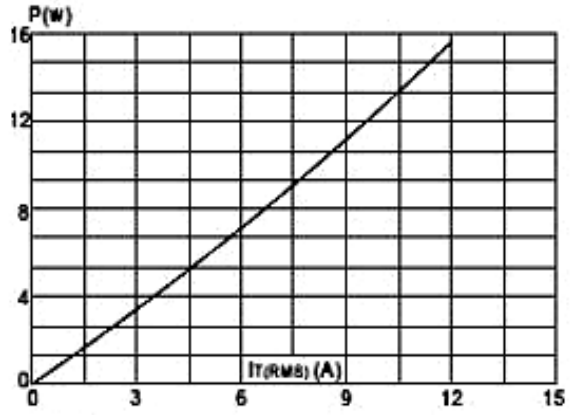

Fig 2: Surge Peak on-state Current Versus Number of Cycles

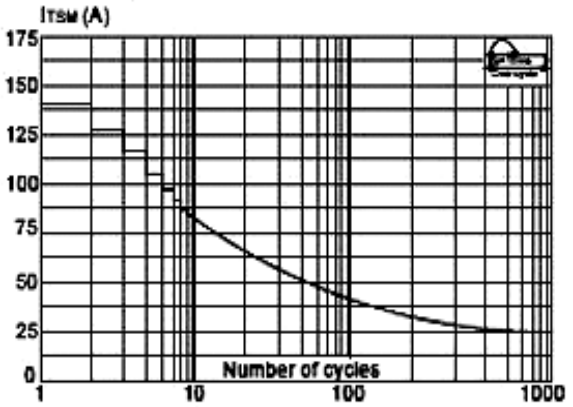

Fig 3: Non-Repetitive surge peak on-state current for a sinusoidal pulse with tp<10ms, and corresponding value of I^2t (dI/dt < 50A/µs

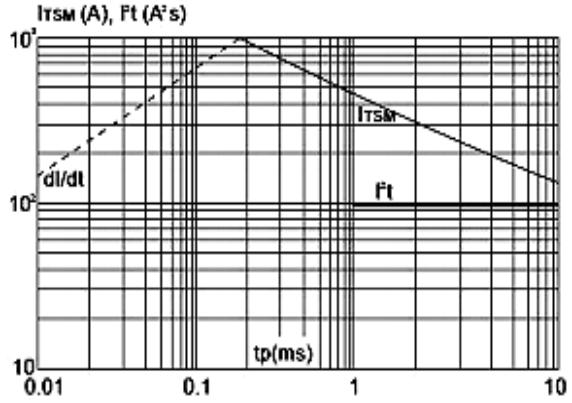

Fig 4: RMS on-state Current Versus case Temperature

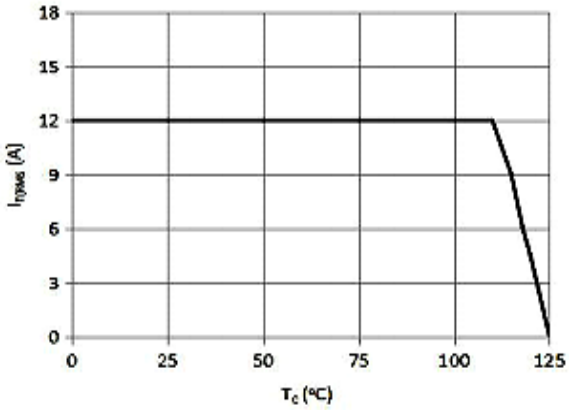

Fig 5: On-state Characteristics (maximum Value)

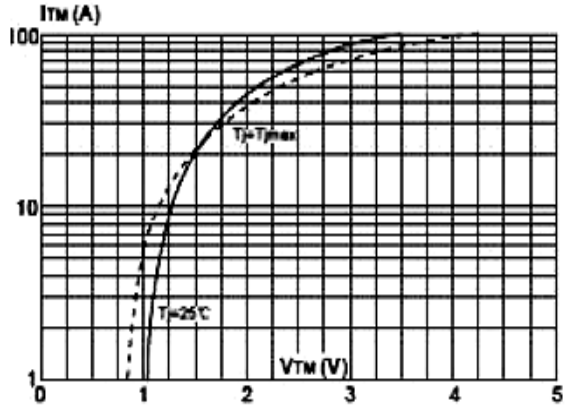

Fig 6: Relative Variations of gate trigger current, holder current and latching current versus junction temperature

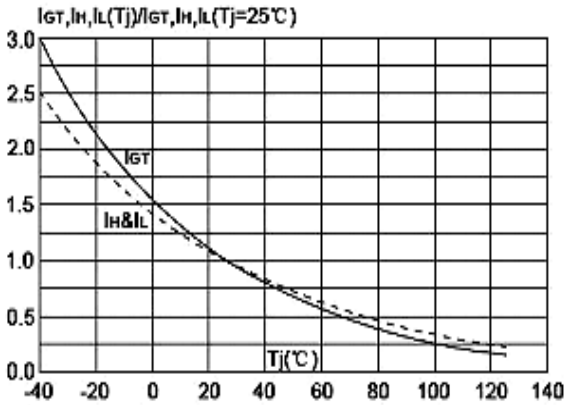

CYN612M
Rev01_30112022EBJ

PACKAGE DETAILS

TO-220 Plastic Package

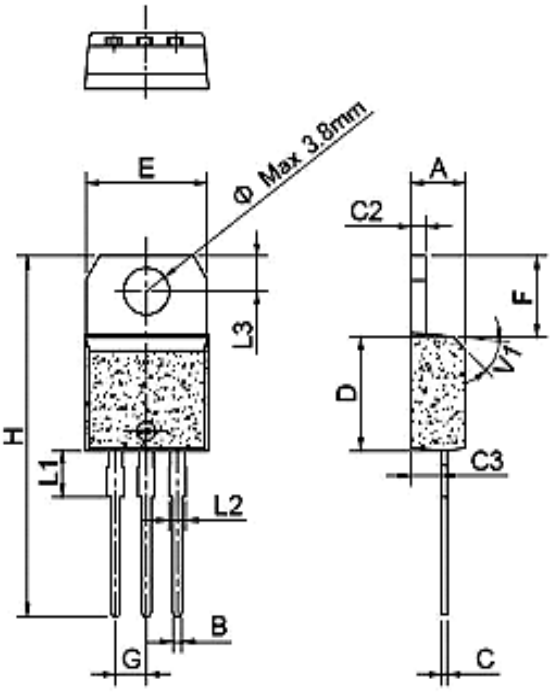

REF.	Dimensions					
	Millimeters			Inches		
	Min	Typ	Max	Min	Typ	Max
A	4.40		4.60	0.173		0.181
B	0.61		0.88	0.024		0.035
C	0.46		0.70	0.018		0.028
C2	1.21		1.32	0.048		0.052
C3	2.40		2.72	0.094		0.107
D	8.60		9.70	0.339		0.382
E	9.60		10.4	0.378		0.409
F	6.20		6.60	0.244		0.260
G		2.54			0.1	
H	28.0		29.8	1.102		1.173
L1		3.75			0.148	
L2	1.14		1.70	0.045		0.067
L3	2.65		2.95	0.104		0.116
V1		45°			45°	

All Dimensions are in mm

Recommended Product Storage Environment for Discrete Semiconductor Devices

This storage environment assumes that the Diodes and transistors are packed properly inside the original packing supplied by CDIL.

- Temperature 5 °C to 30 °C
- Humidity between 40 to 70 %RH
- Air should be clean.
- Avoid harmful gas or dust.
- Avoid outdoor exposure or storage in areas subject to rain or water spraying .
- Avoid storage in areas subject to corrosive gas or dust. Product shall not be stored in areas exposed to direct sunlight.
- Avoid rapid change of temperature.
- Avoid condensation.
- Mechanical stress such as vibration and impact shall be avoided.
- The product shall not be placed directly on the floor.
- The product shall be stored on a plane area. They should not be turned upside down. They should not be placed against the wall.

Shelf Life of CDIL Products

The shelf life of products is the period from product manufacture to shipment to customers. The product can be unconditionally shipped within this period. The period is defined as 2 years.
If products are stored longer than the shelf life of 2 years the products shall be subjected to quality check as per CDIL quality procedure.
The products are further warranted for another one year after the date of shipment subject to the above conditions in CDIL original packing.

Floor Life of CDIL Products and MSL Level

When the products are opened from the original packing, the floor life will start.
For this, the following JEDEC table may be referred:

JEDEC MSL Level		
Level	**Time**	**Condition**
1	Unlimited	≤30 °C / 85% RH
2	1 Year	≤30 °C / 60% RH
2a	4 Weeks	≤30 °C / 60% RH
3	168 Hours	≤30 °C / 60% RH
4	72 Hours	≤30 °C / 60% RH
5	48 Hours	≤30 °C / 60% RH
5a	24 Hours	≤30 °C / 60% RH
6	Time on Label(TOL)	≤30 °C / 60% RH

Customer Notes

Component Disposal Instructions

1. CDIL Semiconductor Devices are RoHS compliant, customers are requested to please dispose as per prevailing Environmental Legislation of their Country.
2. In Europe, please dispose as per EU Directive 2002/96/EC on Waste Electrical and Electronic Equipment (WEEE).

Disclaimer

The product information and the selection guides facilitate selection of the CDIL's Semiconductor Device(s) best suited for application in your product(s) as per your requirement. It is recommended that you completely review our Data Sheet(s) so as to confirm that the Device(s) meet functionality parameters for your application. The information furnished in the Data Sheet and on the CDIL Web Site/CD are believed to be accurate and reliable. CDIL however, does not assume responsibility for inaccuracies or incomplete information. Furthermore, CDIL does not assume liability whatsoever, arising out of the application or use of any CDIL product; neither does it convey any license under its patent rights nor rights of others. These products are not designed for use in life saving/support appliances or systems. CDIL customers selling these products (either as individual Semiconductor Devices or incorporated in their end products), in any life saving/support appliances or systems or applications do so at their own risk and CDIL will not be responsible for any damages resulting from such sale(s).
CDIL strives for continuous improvement and reserves the right to change the specifications of its products without prior notice.

CDIL is a registered trademark of
Continental Device India Pvt. Limited
C-120 Naraina Industrial Area, New Delhi 110 028, India.
Telephone +91-11-2579 6150, 4141 1112 Fax +91-11-2579 5290, 4141 1119
email@cdil.com www.cdil.com
CIN No. U32109DL1964PTC004291

CYN612M
Rev01_30112022EBJ